Parryware
always in fashion

A

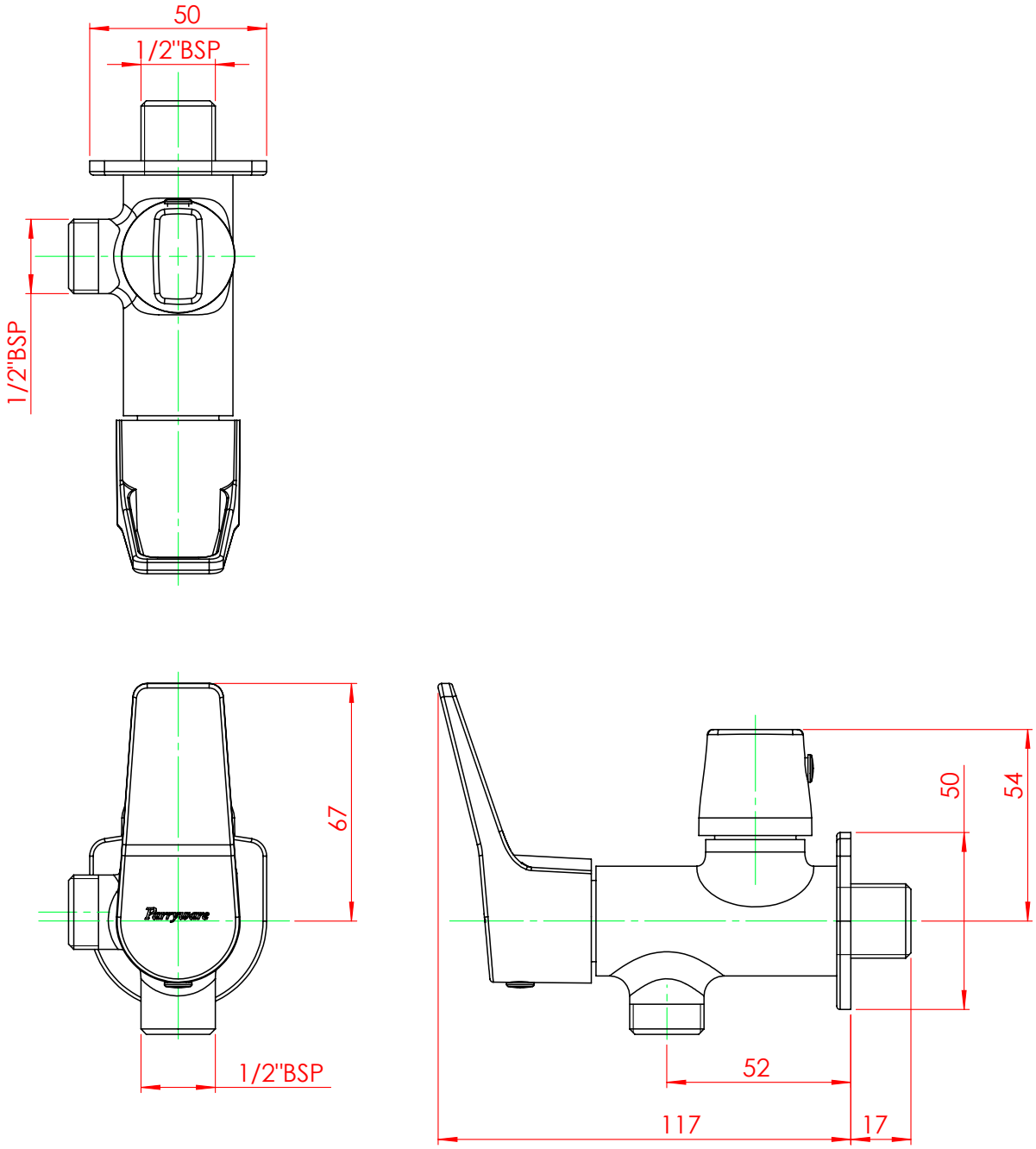

Parryware always in fashion

Roca Bathroom Product Pvt. Ltd.

SKU Code:	G5743A1
Product Name:	AQUA 2 WAY ANGLE VALVE
Unit:	mm