Parryware
always in fashion

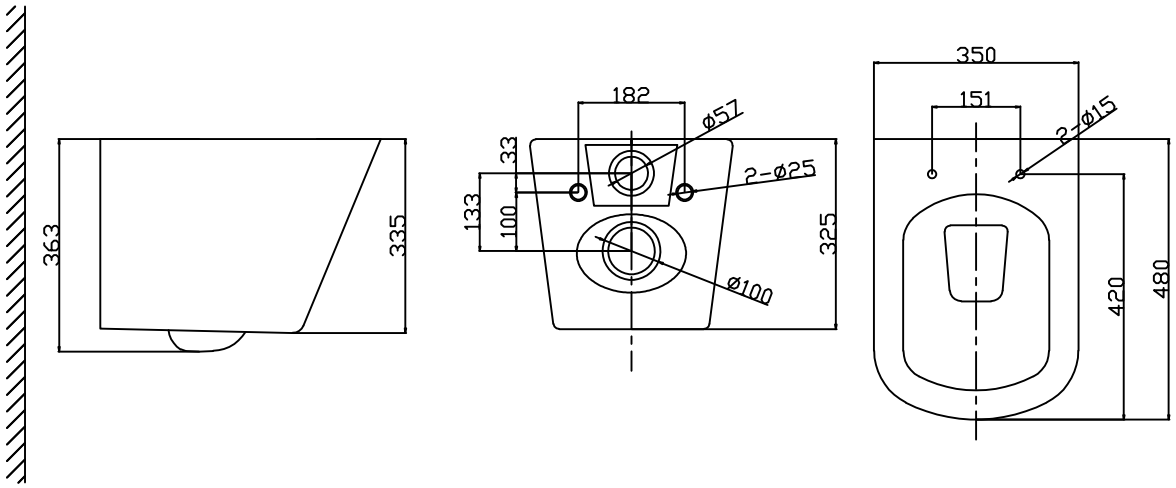

Parryware always in fashion — Roca Bathroom Product Pvt. Ltd.

SKU Code:	C893546
Product Name:	SINGLE PIECE SUITE (S-TRAP) INSLIM
Dimensions:	480 x 350 x 363 (L x B x H)
Unit:	mm